NOVA LUCE

9820591

1

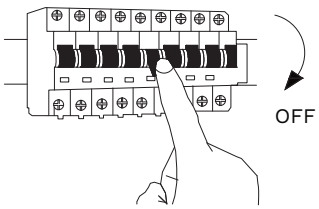

Turn off the general switch

2

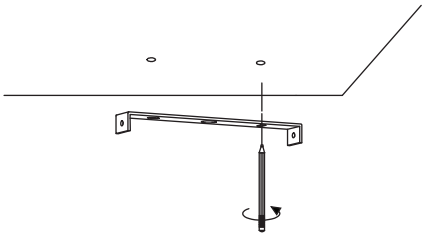

Mark where to drill holes

3

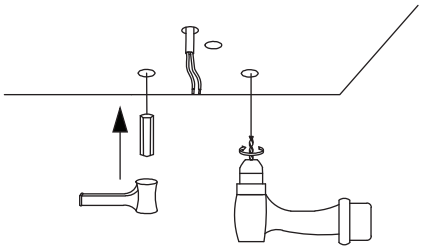

Make holes & apply anchors

4

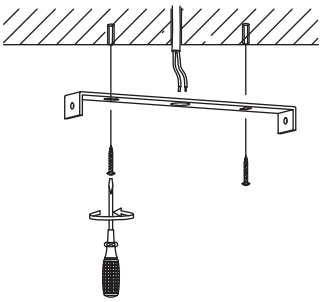

Tie up the screws
to make it stable

5

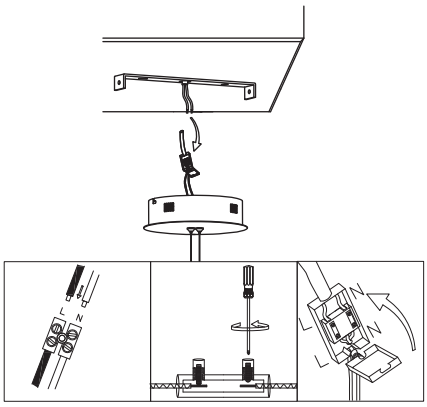

Connect the wires

6

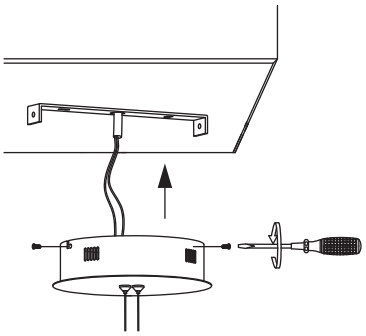

Fix the luminaire into place
by tying up the side screws

7

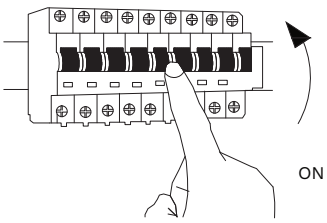

Turn on the general switch

8

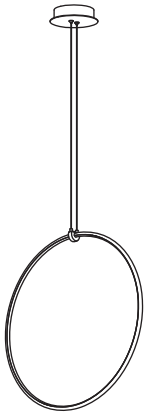

www.novaluce.com